HOBO INSTRUCTIONS - DATA OFFLOAD FROM SHUTTLE

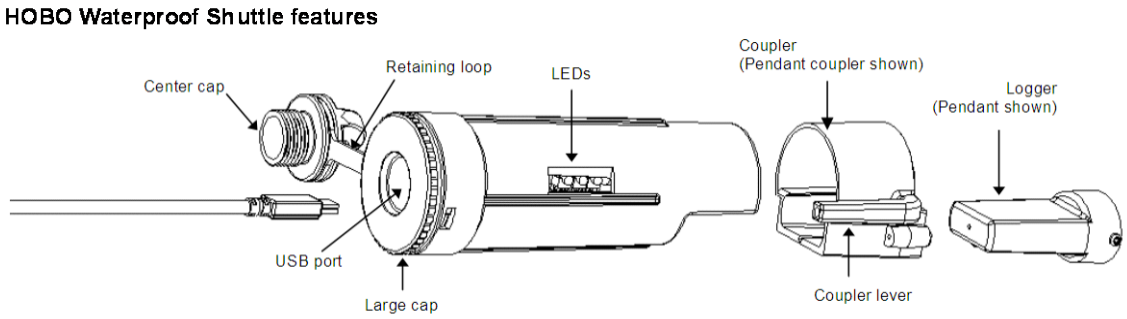

1) Unscrew the center cap from the end of the shuttle to access USB connection port and plug in the small end of the USB cable to the Shuttle

2) Connect the Shuttle to the computer via USB port

3) Open the HOBOware Pro program (there should be an icon in the dock). Once HOBOware Pro is open, you should see in the bottom left corner that it is connected to the Shuttle device (Dev:)

4) Choose 'Readout' from the 'Device' menu or click on the icon in the top left corner of the toolbar.

5) A window will open up and the files on the shuttle will start uploading

6) Select the files that you would like to save onto the computer and click the 'Offload Checked' button

7) Next you will be asked where to save the files. To start, save all the files from each shuttle into a separate folder with the initials of the person who did the downloading from the loggers and the date of the download (example: ERJ_21may2011).

8) Make sure the folders with each shuttle's download is located within another folder called 'HOBO_tree_downloads_May2012' or something appropriate to your current situation.

9) The files created from this will be a .hobo file. Once you have offloaded the shuttle and saved the files, go into the folder and open each .hobo file, one at a time.

10) Double click on the file and a 'Plot Setup' window will pop up, Click 'Plot' and the file will open, the plot will be in the front/lower window and the tabular data will be on top/back.

11) Look at the data to see that the date ranges are what you expect to see (that they span when we put out the logger or when it was last downloaded to when you just

downloaded it). Look for any abnormalities (example: extreme temperatures) or places where data was not collected (you might see a 'bad battery' symbol).

12) For each file, fill in the spreadsheet indicating the site, data of download, person who downloaded, file name, shuttle number used for downloading (*this will be especially important if a shuttle with the clock that was off was used to download the data), and any problems with the data.

13) Finally, save another copy of the data in a .csv file. To do this, choose 'Export Table Data' from the 'File' menu or click on the icon from the middle of the top toolbar.

14) The 'Export Options' window will come up and you will then be prompted to save them as one file or split them up into multiple files – Save them as one file. Click 'Export'

15) Next, a window will pop up asking you were to save the file. Save it in a separate folder named 'CSV' but in the same folder indicating the person and date of download where the .hobo files are located.

16) For all of the files, both .hobo and .csv, batch add the download date to the end of the file names (ask April or Sveta how to do this).

17) Once you have offloaded all the files from all of the shuttles, save another copy of all of the data onto an external hard drive. Do not erase the files from the Shuttles.

SHUTTLE MANAGEMENT

To check the shuttle battery level and synch the shuttle clock with the computer clock –

1) With the Shuttle connected to the computer and HOBOware Pro choose 'Manage Shuttle' from the 'Device' menu.

2) The 'Shuttle Management' window will open. You will see the battery level on the top, check to see that the level is high enough and that the batteries do not need to be changed in the Shuttle.

3) Next, check the difference from the shuttle clock and the computer clock. ***BEFORE SYNCHING THE TWO CLOCKS*** record the difference between the two for each shuttle and enter it into a spreadsheet.

4) Once you have recorded the difference in the shuttle and computer clock, click the 'Sync Shuttle Clock' button.

5) Erase any old files from the shuttle (from last year), but check that their status reads 'OFFLOADED' before doing so. Keep this year's files on the Shuttle for now.